POIGNEE ESC. "TRIM-LINE

82-7-1747

Poids (g)	350 g

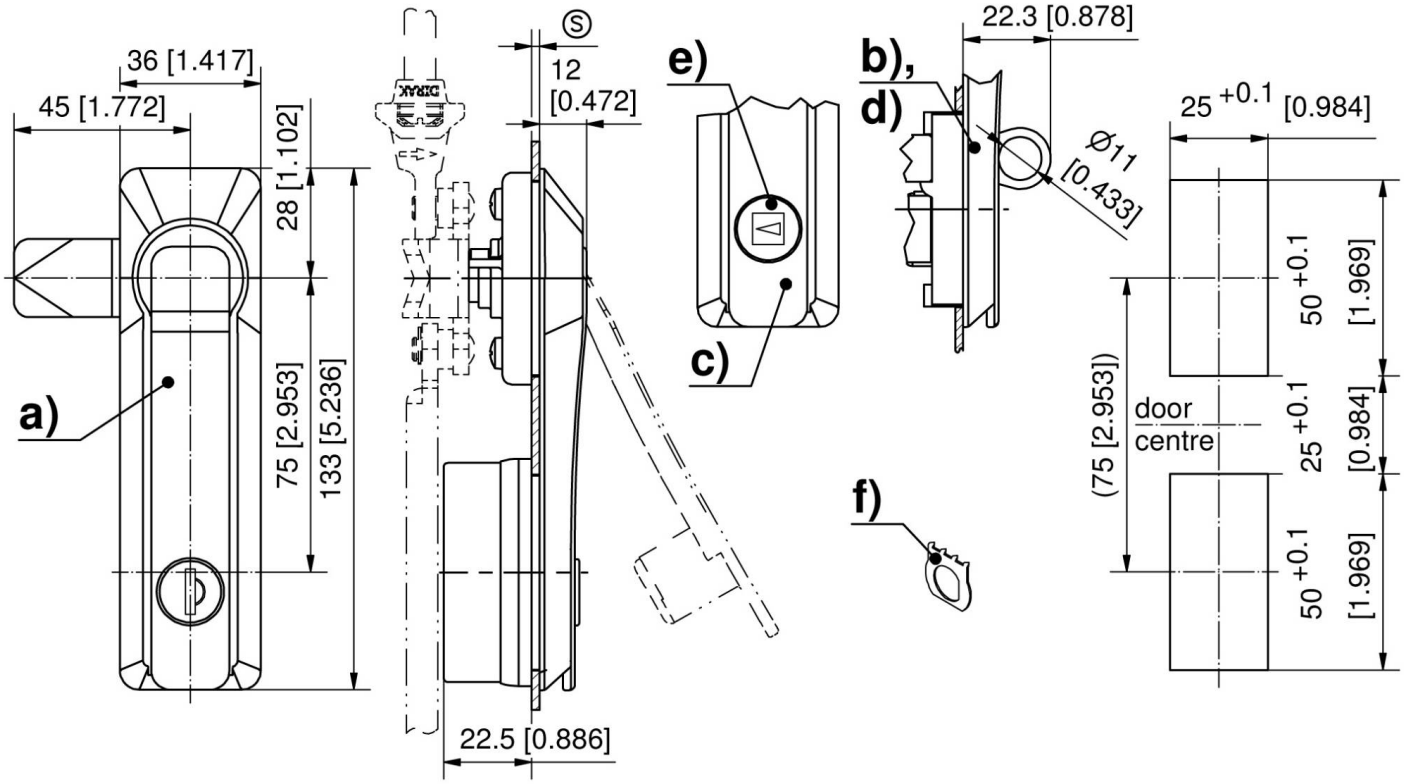
36 [1.417]
45 [1.772]
28 [1.102]
75 [2.953]
133 [5.236]
a)
Ⓢ
12
[0.472]
22.5 [0.886]
e)
c)
b),
d)
22.3 [0.878]
Ø11
[0.433]
f)
25 +0.1 [0.984]
50 +0.1 [1.969]
25 +0.1 [0.984]
50 +0.1 [1.969]
(75 [2.953])
door
centre