POIGNEE ESC. DEMI CYL. L40

82-7-1056

Poids (g)	236 g

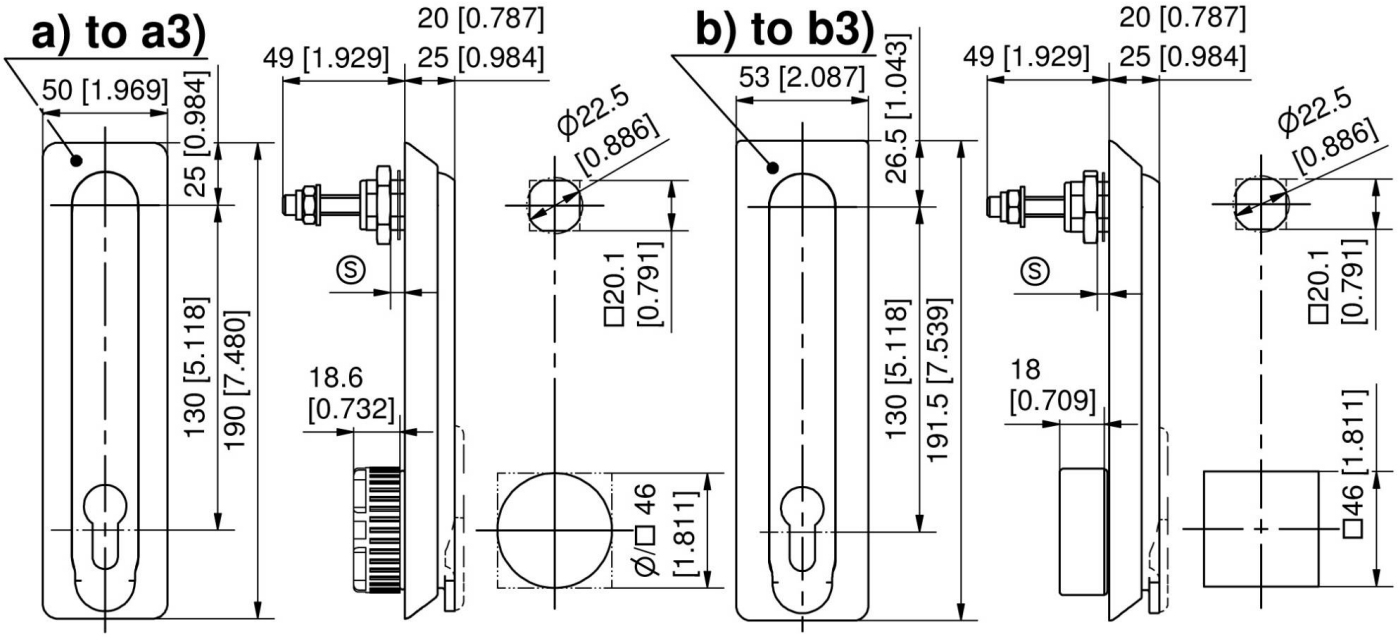
a) to a3)
50 [1.969]
25 [0.984]
130 [5.118]
190 [7.480]
49 [1.929]
20 [0.787]
25 [0.984]
18.6
[0.732]
Ⓢ
Ø22.5
[0.886]
□20.1
[0.791]
Ø/□ 46
[1.811]
b) to b3)
53 [2.087]
26.5 [1.043]
130 [5.118]
191.5 [7.539]
49 [1.929]
20 [0.787]
25 [0.984]
18
[0.709]
Ⓢ
Ø22.5
[0.886]
□20.1
[0.791]
□46 [1.811]