POIGNEE ESC. CLE DIF. + C

82-7-1269

Poids (g)	180 g

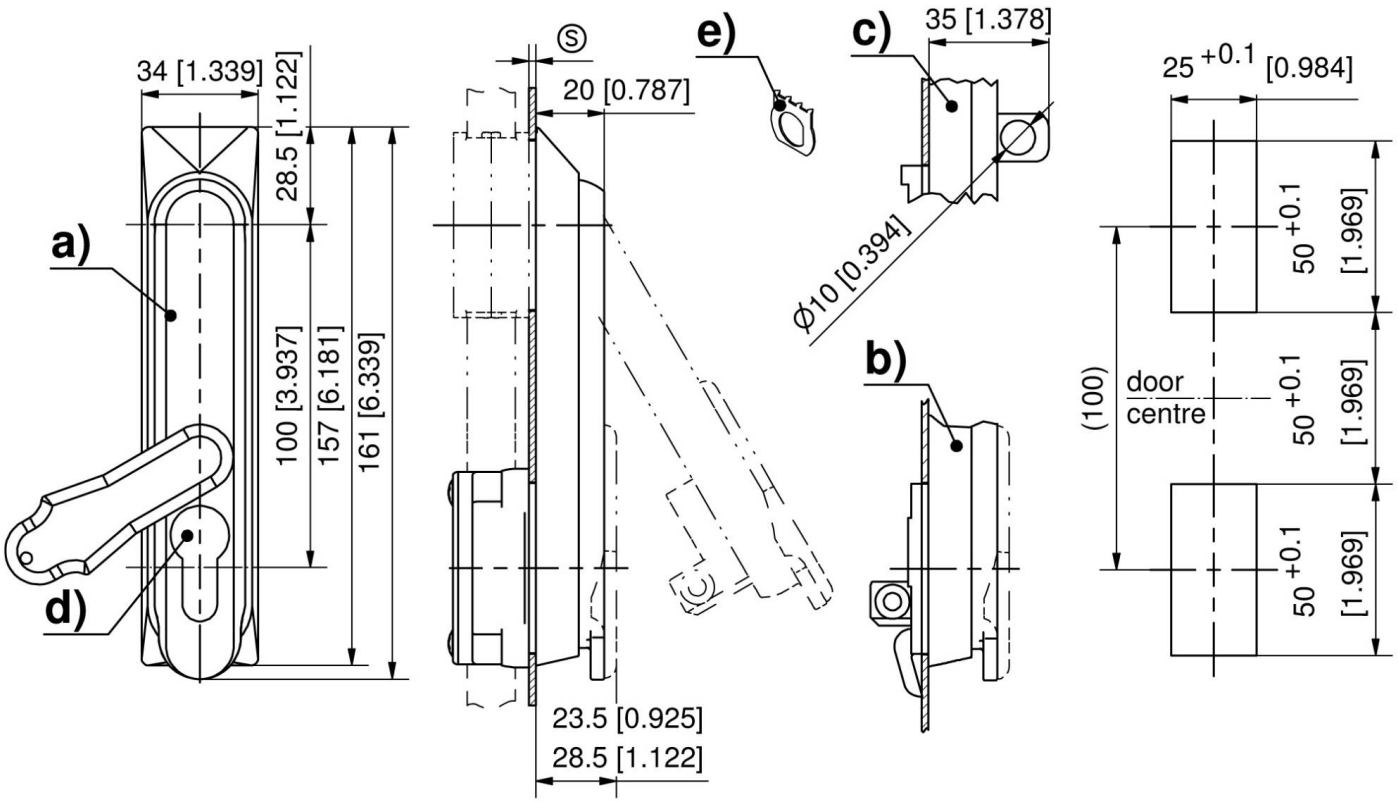
34 [1.339]
28.5 [1.122]
a)
100 [3.937]
157 [6.181]
161 [6.339]
d)
Ⓢ
20 [0.787]
23.5 [0.925]
28.5 [1.122]
e)
c)
35 [1.378]
Ø10 [0.394]
b)
25 +0.1 [0.984]
50 +0.1 [1.969]
(100)
door
centre
50 +0.1 [1.969]
50 +0.1 [1.969]