CACHE LONG (C) SOFTLINE

83-7-6505

Poids (g)	13 g

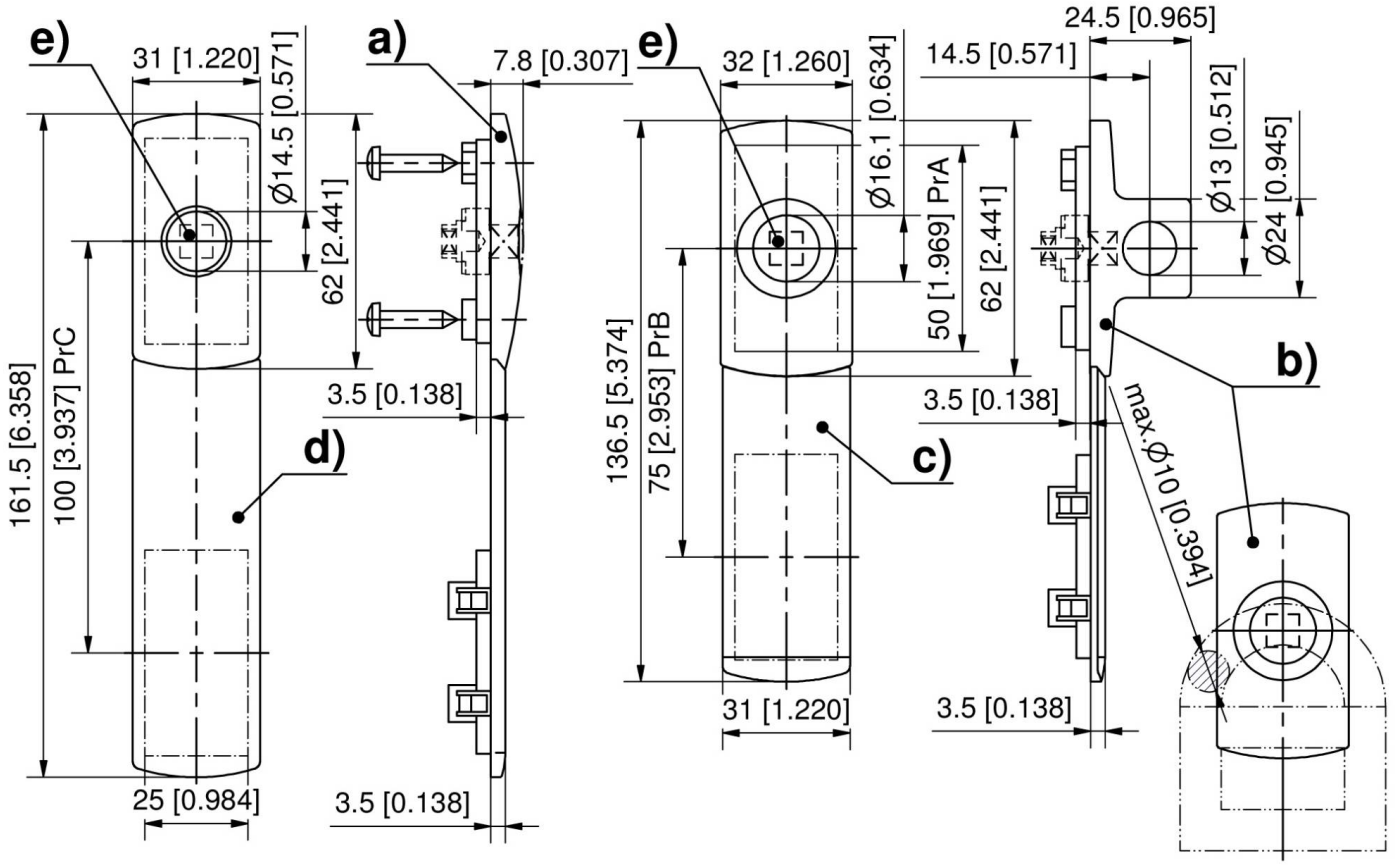
e)
31 [1.220]
Ø14.5 [0.571]
62 [2.441]
161.5 [6.358]
100 [3.937] PrC
d)
25 [0.984]
a)
7.8 [0.307]
3.5 [0.138]
3.5 [0.138]
e)
32 [1.260]
Ø16.1 [0.634]
50 [1.969] PrA
62 [2.441]
136.5 [5.374]
75 [2.953] PrB
c)
31 [1.220]
24.5 [0.965]
14.5 [0.571]
Ø13 [0.512]
Ø24 [0.945]
b)
3.5 [0.138]
max.Ø10 [0.394]
3.5 [0.138]