CROCHET DOUBLE (INTERIEUR)

84-7-9401

Poids (g)	59 g

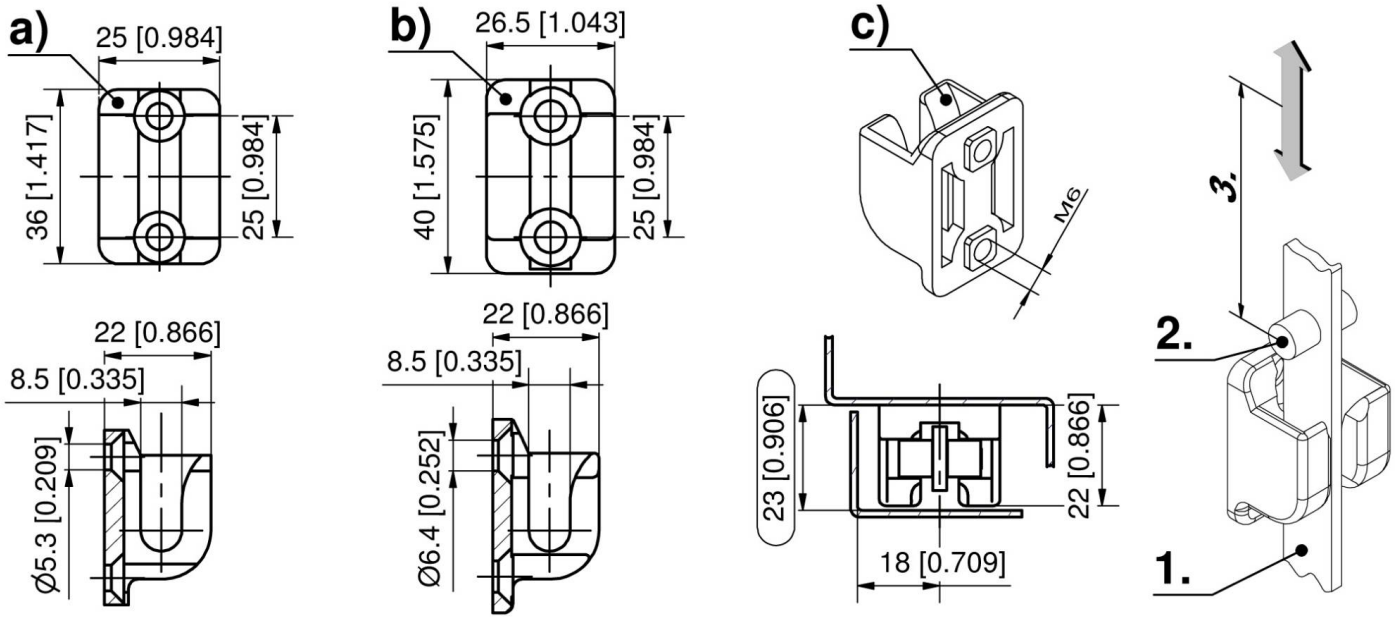
a)
25 [0.984]
36 [1.417]
25 [0.984]
22 [0.866]
8.5 [0.335]
Ø5.3 [0.209]
b)
26.5 [1.043]
40 [1.575]
25 [0.984]
22 [0.866]
8.5 [0.335]
Ø6.4 [0.252]
c)
M6
23 [0.906]
22 [0.866]
18 [0.709]
3.
2.
1.