CHARNIERE INV. INOX A VISSER

85-7-2202

Poids (g)	52 g

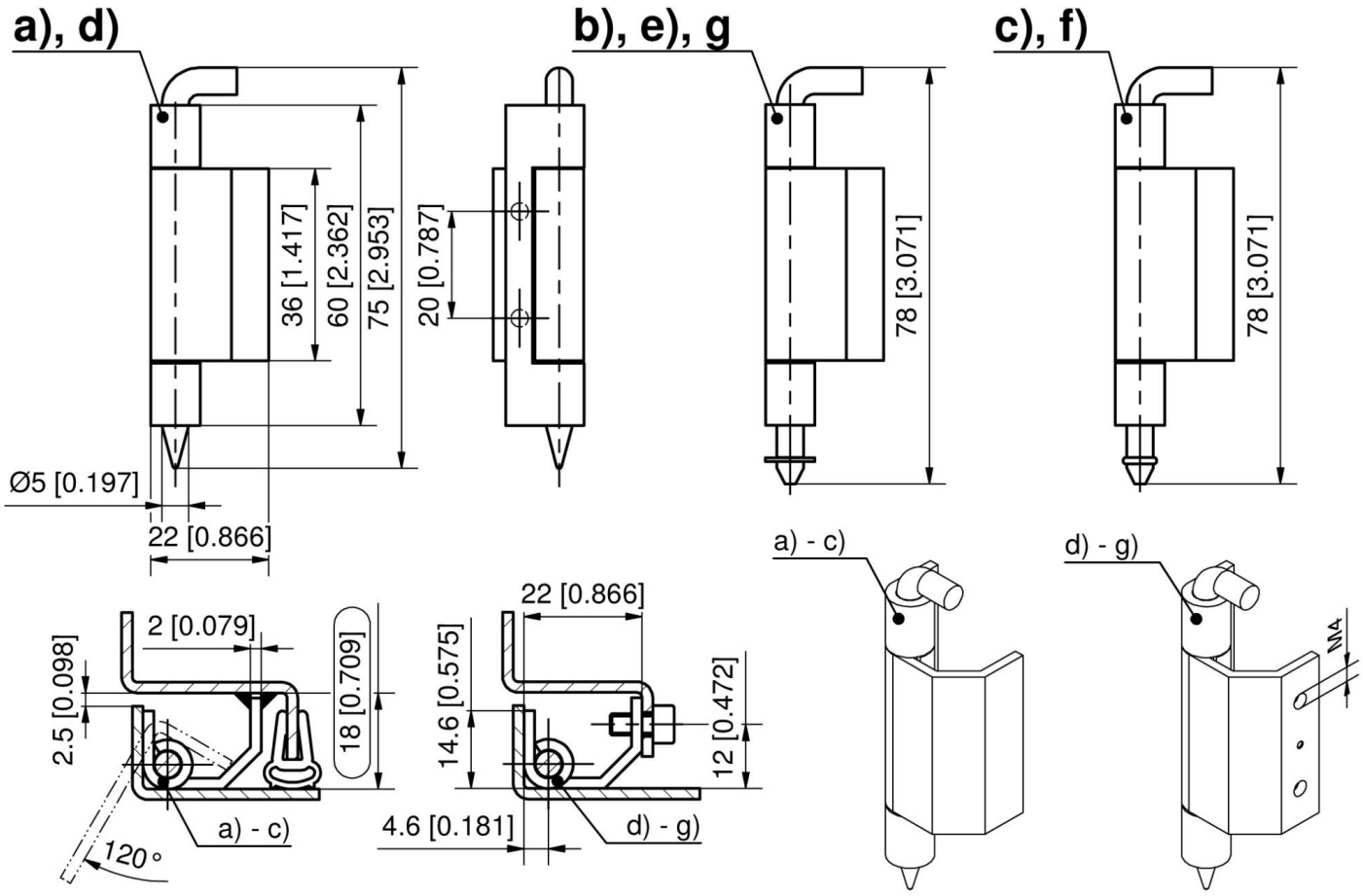
a), d)
b), e), g
c), f)
36 [1.417]
60 [2.362]
75 [2.953]
20 [0.787]
78 [3.071]
78 [3.071]
Ø5 [0.197]
22 [0.866]
a) - c)
d) - g)
2 [0.079]
2.5 [0.098]
18 [0.709]
120°
a) - c)
22 [0.866]
14.6 [0.575]
12 [0.472]
4.6 [0.181]
d) - g)
M4