CLE MULTIPLE POUR ROTORS

81-7-4129

Poids (g)	59 g

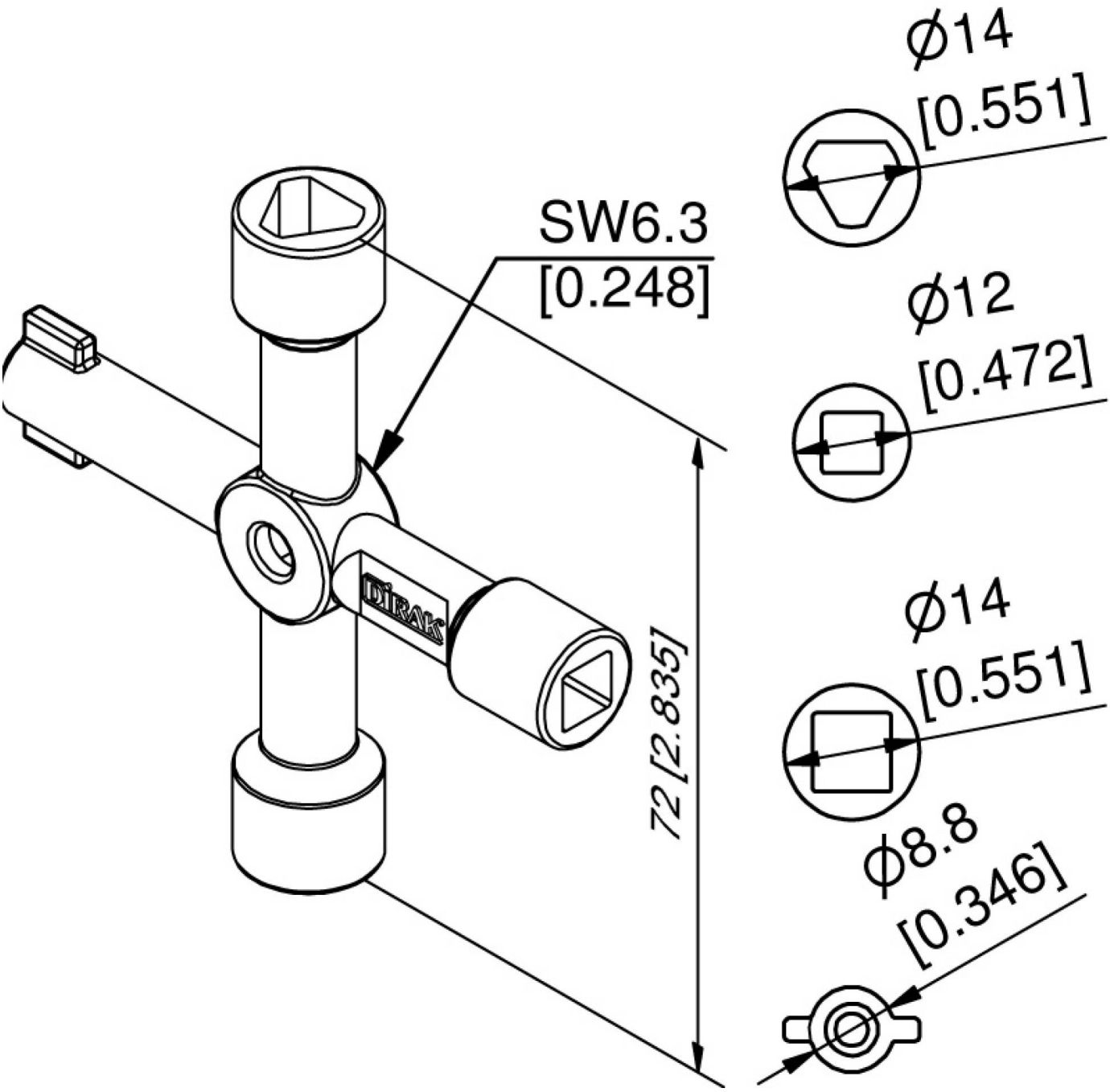
Ø14
[0.551]
SW6.3
[0.248]
Ø12
[0.472]
Ø14
[0.551]
72 [2.835]
Ø8.8
[0.346]