CONCEALED HINGES WITH TWO CRANKED LEAVES - DRILLED - 120° OPENING - VERSION B

39-1-3892

Hinges for side door of baggage compartment (bus and coach, bodywork...)
Use rivets for 4.2 diameter holes (door side).
Use self-drilling screws for 12.2 diameter holes (frame side).

A	600 mm
Material	304 stainless steel
Weight (g)	870 g
B	54.1 mm
C	1.5 mm
E (knuckle or thickness)	12.5 mm
D (pin diameter)	3
G (pitch)	260 mm
H (height or starting holes)	40 mm
Finish	raw
J	130 mm
L	160 mm

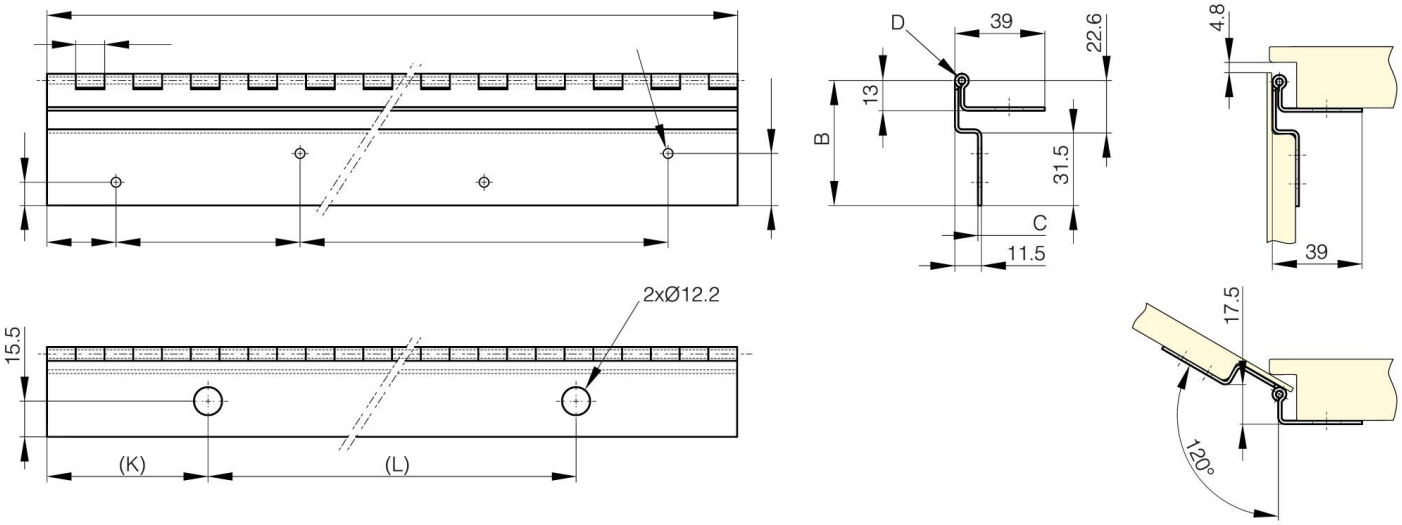

K	60 mm