SWIVEL TORQUE HINGE WITH HOLE DIAMETER 34 MM - TORQUE 7 N.M

70-7-3638

Rotation angle: 360°.
Friction torque: 7 N.m.
Center hole for easy cable management.
For indoor applications (industrial control panels and monitors).
Produced mainly in stainless steel, for a complete description of the materials contact us.
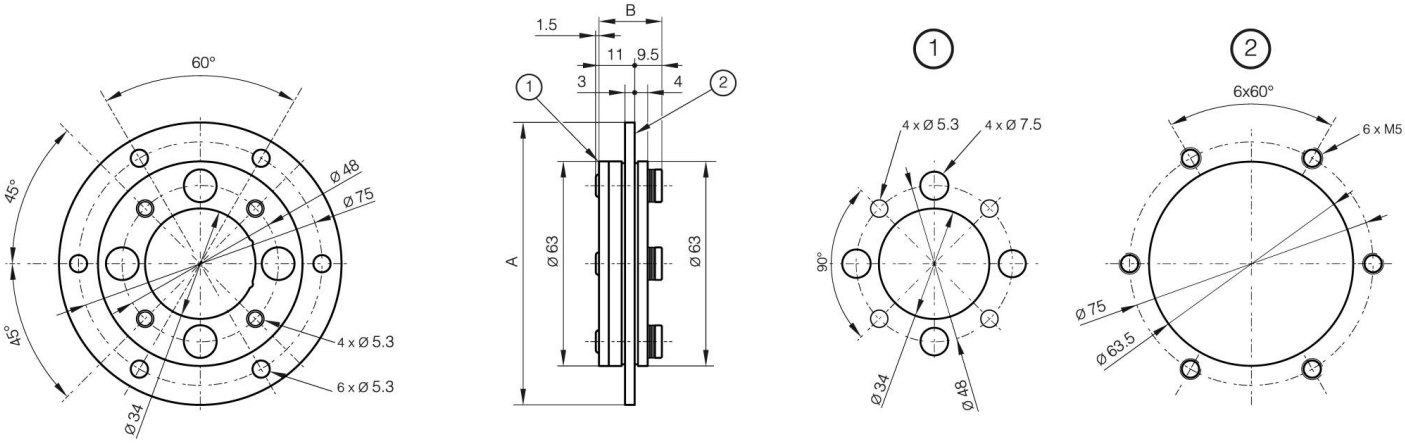
A	87 mm
Material	430 stainless steel
Weight (g)	282 g
Torque	7 N.m N.m
B	20.5 mm
Finish	polished