# CONCEALED HEAVY DUTY HINGE FOR FLUSH DOORS - 90° OPENING

## 85-7-2331

Concealed hinge for LH or RH application. The 2 main hinge parts have a central guide to prevent door from sagging during adjustement.

| | |
|---|---|
| **A** | 60 mm |
| **Material** | 304 stainless steel |
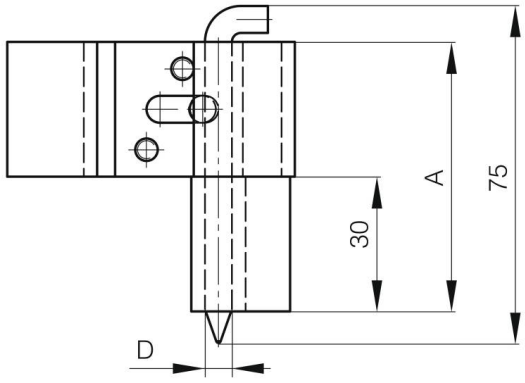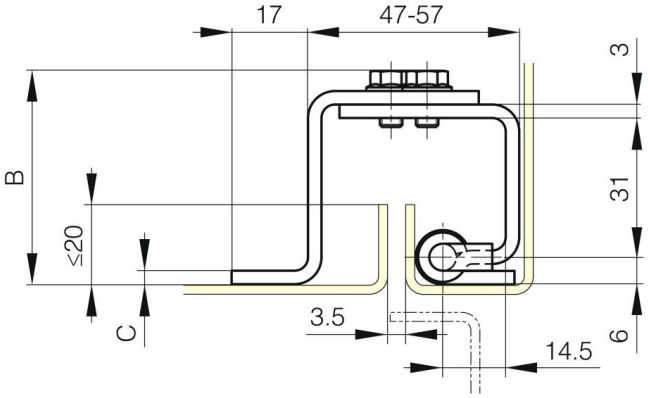
| | |
|---|---|
| **Weight (g)** | 189 g |
| **B** | 48 mm |
| **C** | 3 mm |
| **D (pin diameter)** | 6 |
| **Finish** | raw |