HEAVY DUTY HINGE - 66 X 230 MM

50-1-4060

Stainless steel riveted pin.

A	66 mm
Material	steel
Weight (g)	622 g
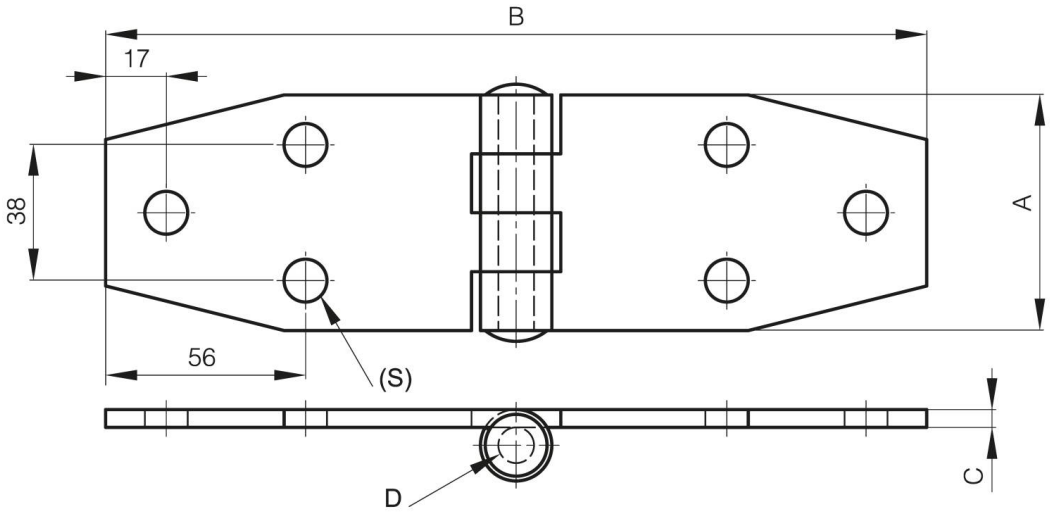
B	230 mm
C	5 mm
S (hole diameter)	12 mm
D (pin diameter)	10
Finish	zinc plated