DETENT PLASTIC HINGES

54-7-3509

Holds door leaves in 4 different positions (90° each).
Maximum door weight: 1.2 kg/pair.
303 stainless steel pin.

A	50 mm
Material	polyacetal
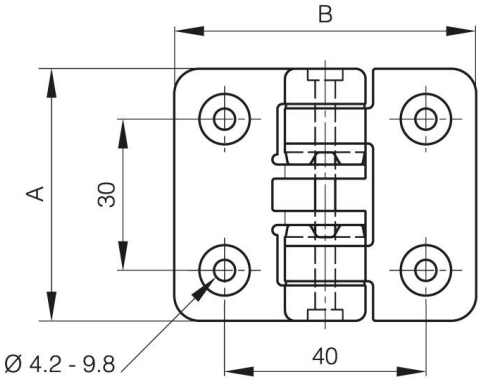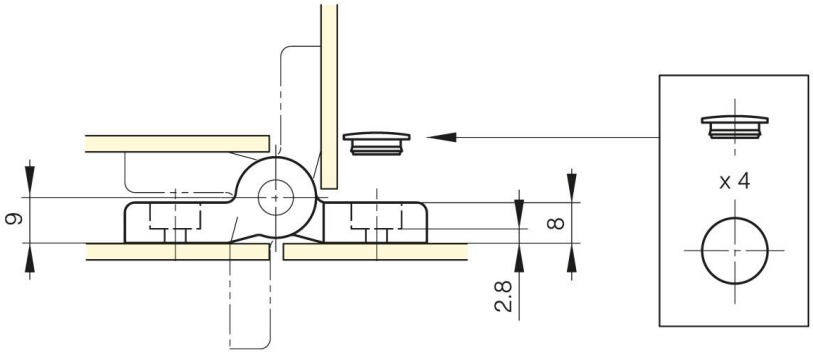
Weight (g)	32 g
Torque	0.49 N.m N.m
B	60 mm
Finish	ivory