MULTI LINK CONCEALED HINGES - 180° OPENING

70-7-3540

Links and pins: 303 and 304 stainless steel or steel.

A	45 mm
Material	zinc die-cast

Weight (g)	55 g
B	22.7 mm
C	32 mm
S (hole diameter)	3.5 mm
E (knuckle or thickness)	13 mm
D (pin diameter)	18.5
F (pitch)	19 mm
G (pitch)	5 mm
H (height or starting holes)	6 mm
Finish	chrome plated satin

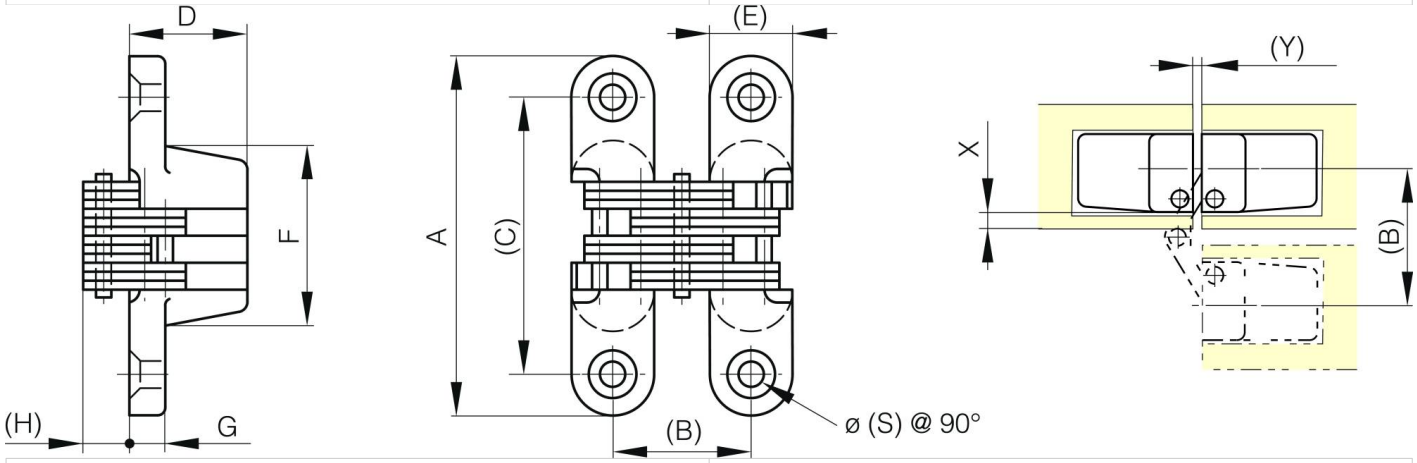

X (dimension for concealed hinge 180°)	? 3 mm
Y	0.8 mm