CONCEALED HEAVY DUTY HINGE FOR FLUSH DOORS - 90° OPENING

85-7-1321

Concealed hinge for LH or RH application. The 2 main hinge parts have a central guide to prevent door from sagging during adjustement.

A	60 mm
Material	steel
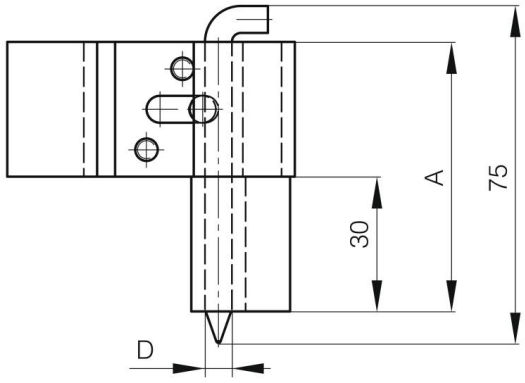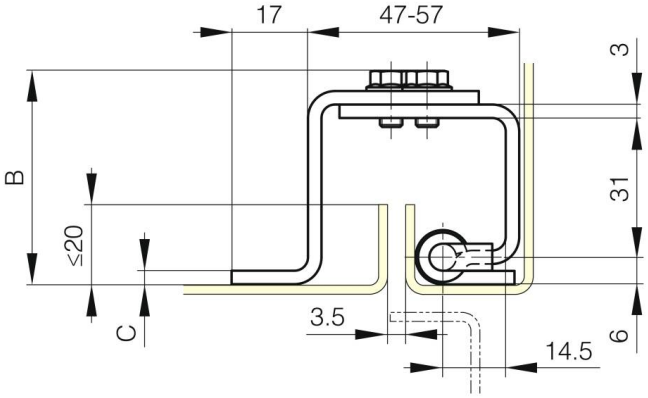
Weight (g)	189 g
B	48 mm
C	3 mm
D (pin diameter)	6
Finish	raw / zinc plated